Microdosing Low Pressure Machines

OMS Group

Polyurethane Evolution

FM - IMPACT 2 e 4 Series
&
IMPACT 2 e 4 Series

FM-IMPACT 2- 4 e IMPACT 2- 4

The brand new **FM-IMPACT 2-4** and **IMPACT 2-4 series** of low pressure machines launched by **OMS Group** marks a new era in our technology and results from our long-lasting endeavour in development and research in the polyurethane field.

Both **FM - IMPACT 2-4** and **IMPACT 2-4** series of low pressure micro dosing machines have been designed and made for the production of either rigid, flexible or integral PU foam products.

The main difference between the two series relates to the control system; in fact, the **FM - IMPACT 2-4** series featues as standard an electric control panel which provides for the handling of all operating cycles thorugh an electro-mechanical logic module, whereas the **IMPACT 2-4** series features as standard a control panel which provides for the handling of sequential work cycles through a Siemens S7 series PLC interfaced with the operator panel.

FM - IMPACT 2-4 and **IMPACT 2-4** series both are the result of **OMS**'s will to meet customers' demanding requirements and needs by proposing a simple, user friendly setting of machine parameters, status displays, pouring times etc.

In fact, in designing both **FM - IMPACT 2-4** and **IMPACT 2-4**, we kept in mind to simplify and minimise maintenance operations.

METERING PUMPS

N° 2 independently controlled, high accuracy metering groups.

Each metering group feeds the mix head and has the following features:

- minimum, maximum output and related ratios as specified in the enclosed table;
- pumps driven by asynchronous, three-phase motors (one for each pump) and controlled by a frequency converter to ensure precise control of pump speed;
- pump and/or motor revolutions are set through suitable potentiometer located on the electric control panel for the **FM-IMPACT 2-4** series, wheres for the **IMPACT 2-4** series are set through the operator panel;
- double seal gear pumps with related lubricating circuit;
- digital pressure gauge fitted on delivery side of each metering pump to display working pressure and complete with maximum pressure safety contact;
- maximum working pressure - 15 bar;
- filter on the suction side of the pump (only on Isocyanate line).

COMPONENTS STORAGE AND TEMPERATURE CONDITIONING

N°2 50 l capacity each carbon steel tanks complete with:

- Flanged and removable lid;
- Slow-speed agitator driver by a motor reducer;
- Connection for automatic loading system (optional);
- Silica gel filter (on isocyanate tank only);
- Connection for automatic loading levels (optional);
- Hatch for manual loading;
- Nylon visual level tube;
- External jacket for components temperature control.

The temperature control of each single component is obtained by recycling the components directly within the tank through a system including:

- Electric resistances inside the jacket for heating;
- Intercepting valve for cooling by cold water;
- Component temperatures monitored by a PT 100 probe and controlled by a digital thermo regulator in the **FM-IMPACT 2-4** and by a PLC in the **IMPACT 2-4** series.

Series

SERVICES REQUIRED

Electrical power: 400VAC; 50Hz; 3-phase+neutral+earth
Compressed air: dry industrial air at 8 bar
Working temperature range: from +10°C to 35°C

CONTROL PANEL

The **FM-IMPACT 2-4** series of low pressure machines is monitored and controlled through an electro-mechanic logic module.

Cycle times are handled through pertinent timers placed inside the panel, while pouring times are handled through digital timers (2 no as standard) easily reacheable by the operator. All machine variable and working parameters settings are set through push-buttons and selectors.

The **IMPACT 2-4** series of low pressure machines instead is based on Siemens S7 series PLC for reliability and world-wide service and part availability.

The main difference relates to the control system; in fact, the machine is self-diagnostic and checks that all variables are within their pre-set working range with combined acoustic/text warning alerting the operator should an alarm or anomaly arise.

Indeed, should a variable exceed such pre-set limits, the machine itself will signal an alarm status by triggering a clear text message and, at the same time, all the necessary interventions (depending on the type of alarm) to ensure safe working conditions.

All machine variables and working parameters are set through a graphic operator panel functioning as an interface between the PLC and the operator.

All data will be displayed and a given working page can be retained during the working process should the operator decide so.

ANCILLARIES

- Floating type automatic loading levels for the **FM-IMPACT 2-4** or capacitance type loading levels for the **IMPACT 2-4**;
- Electro-pneumatic loading valves actuated by automatic levels;
- Slow-speed stirrer on components tank;
- Pneumatic pump for refilling from drums;
- Chiller unit;
- Handling of the mix air solenoid valve;
- Additional programmable pouring module: max 10 in the **FM-IMPACT 2-4**; max 99 in the **IMPACT 2-4**;
- Silica gel filter on Polyol tank;
- Power variation;

MIXING HEAD

Recycle type mixing head equipped with pneumatic operation to control components recycle/pouring phases. The mixing chamber and related mixer are suitably dimensioned for micro dosing working outputs.

The pouring head is provided with a range of various diameter nozzles and special valves on the recycle line for adjustment of the recycle and pouring pressure in order to ensure a constant and even production process.

Special seal on the mixer shaft lubricated automatically during the pouring phase.

High shear mixer with anti-dripping device and driven by a three-phase electric motor having a mixing speed of 6,000 rpm obtained by a toothed belt and pulley arrangement.

The mixing head can be prearranged for 4 colour metering lines (optional).

CLEANING CIRCUIT

18 litres capacity pressurised stainless steel cleaning fluid tank.

Minimum level and related alarm within the tank.

Intercepting solenoid valve for pouring head cleaning and drying with related timers to adjust either fluid or air quantity.

Electro-pneumatic relief valve for the cleaning line.

Special manual valve to clean the mixing head in case of mains power failure.

OPTIONAL

Water cleaning system for the mixing chamber;

Automatic air blow;

Low pressure colour dosing unit;

Colour code drawer;

Diaphragm pneumatic pump for refilling from drums;

Gear loading pump;

Machine without beam;

Jollymatic;

Mixer motor with inverter control of mixer speed;

Head movement by pneumatic cylinder;

Pump and mixer rpm readout;

Filter on feeding side to the Polyol/Isocyanate line;

Filter on loading side to the Polyol/Isocyanate line;

Stainless steel tanks;

Vacuum tank;

Pressure tank;

Choice of pouring program from external unit;

Interfacing with the slide for pouring head movement;

SERIES	OUTPUTS						TANKS CAPACITY		WEIGHT Kg
	RATIO 1:1		RATIO 2:1		RATIO 4:1				
	MIN. l/min	MAX. l/min	MIN. l/min	MAX. l/min	MIN. l/min	MAX. l/min	Components litres	Solvent litres	
FM - IMPACT 2	0.2	1.4	0.3	2.1	0.25	1.7	50	18	700
FM - IMPACT 4	0.4	2.8	0.6	3.5	0.5	3.4	50	18	720
IMPACT 2	0.2	1.4	0.3	2.1	0.25	1.7	50	18	700
IMPACT 4	0.4	2.8	0.6	3.5	0.5	3.4	50	18	720

TOTAL INSTALLED POWER FOR EACH MACHINE: FROM 9 TO 12 kW
COOLING CAPACITY FOR EACH MACHINE: 1200 Kcal/h

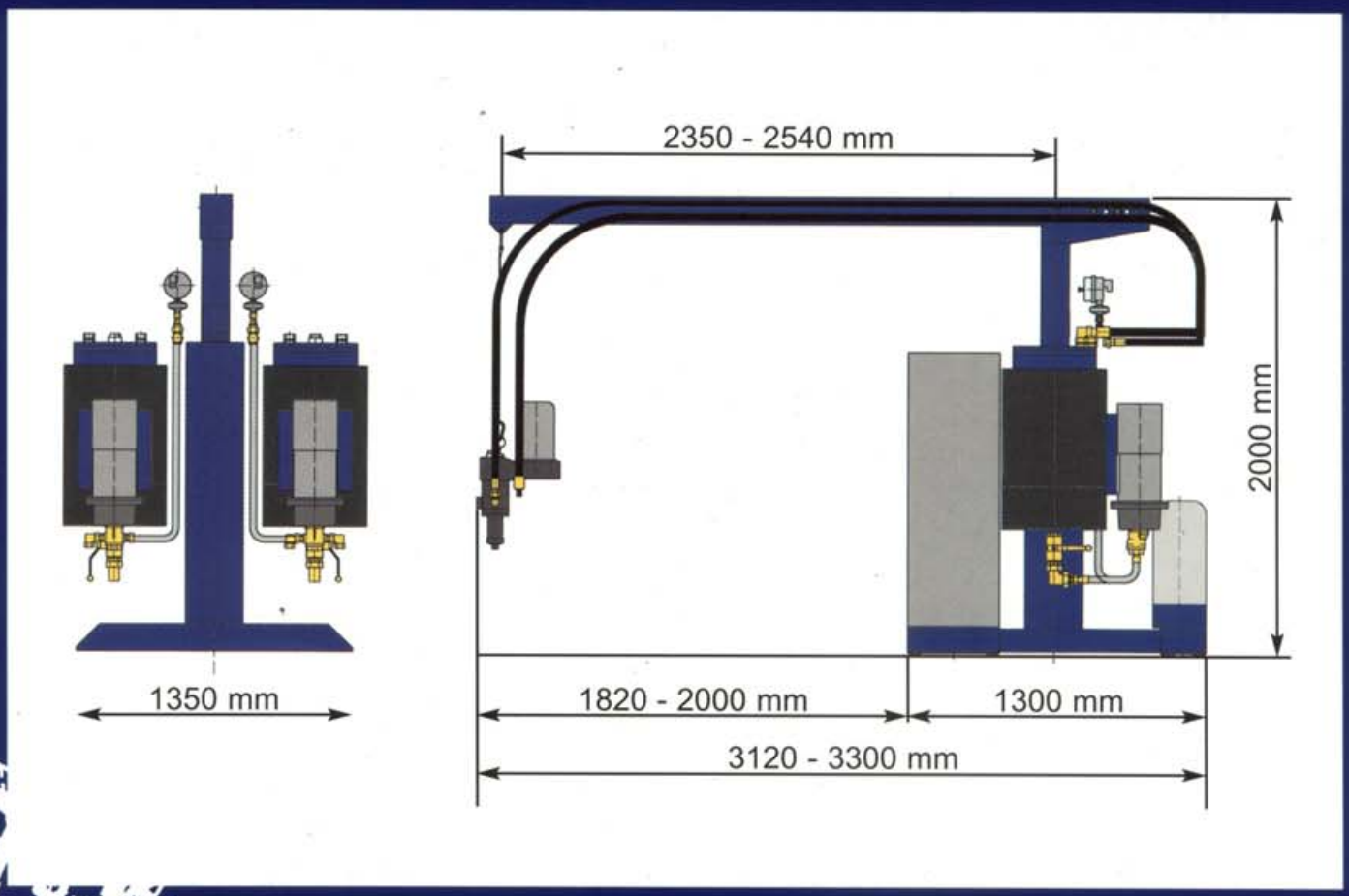

The above data is issued for guidance only. The detailed specification of any machine is subjected to confirmation.
We reserve the right to improve the features of our equipment at any time without prior notice.

OMS Group
Polyurethane Evolution

Impianti OMS Spa
Via Sabbionetta,4
20050 Verano Brianza (Mi), Italy
Tel. +39-0362-9831 Fax +39-0362-983217
e-mail: impianti.oms@omsgroup.it
Internet: www.omsgroup.it

ICIM
ISO 9002 - Cert. n° 0577