High Pressure Machines

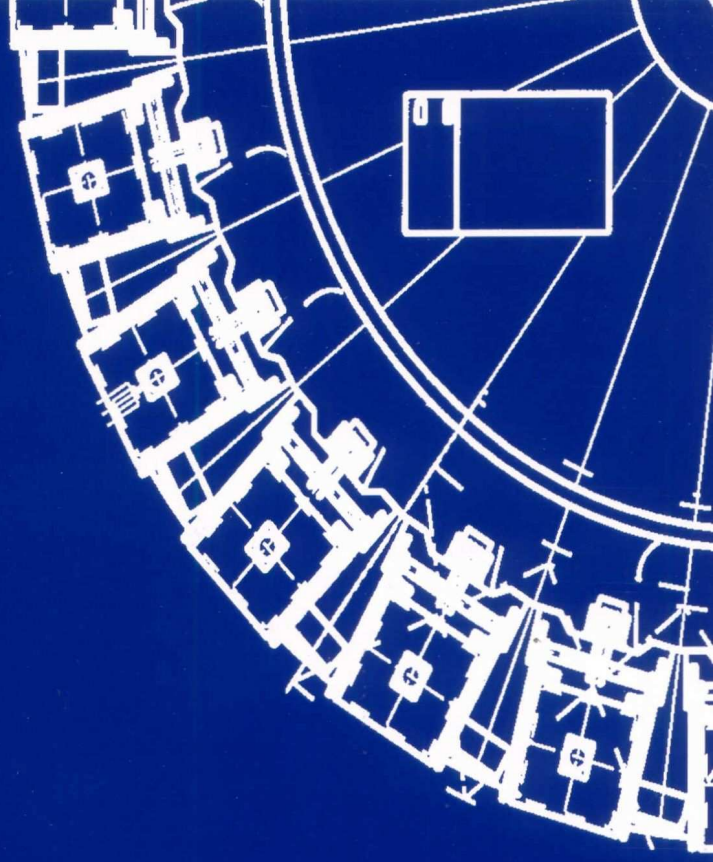

DMS Group

Polyurethane Evolution

ECOplus Series

ECOplus Series

OMS Group has designed and manufactures a new **ECOplus** series of high pressure foaming machines, paying particular attention to the compact design of this machine by proposing a simple, user friendly setting of machine parameters to simplify the introduction to high pressure technology.

This ultimate version of high pressure unit has been created to meet the particular, environmentally friendly performance and budget targets most commonly required by urethane processors wishing to benefit from a simple to use, reliable and well-specified machinet.

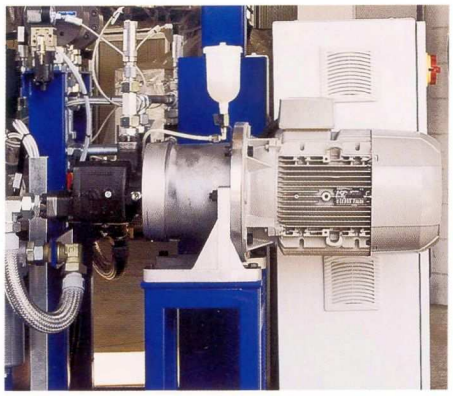

The OMS **ECOplus** series of high pressure units, working at 1:1 or 2:1 basic ratio infinitely variable by inverter with min/max output ranging from 6 l/min to 180 l/min, can be used for virtually all types of polyurethanes production.

METERING PUMP GROUP

N° 2 high pressure metering pump groups, each one feeds the mixing head and has the following features:

- @ high pressure metering pump, rotary axial piston type at fixed output;
- @ inverter control card for pump RPM variation according to different pouring programs
- @ pump horizontal mounted and coupled with a dedicated three-phase electric motor;
- @ double seal pump and relative lubricating group;
- @ cartridge filter on the suction side of the pump;
- @ safety valve for maximum pressure;
- @ digital pressure gauge, double contact type, on delivery side of the metering pump to control the mixing pressure;
- @ digital pressure gauge, single contact type, to control minimum feeling pressure to the suction side of the metering pump.

SERVICES REQUIRED

Electrical power: 400V; 50Hz; 3-phase + neutral + earth

Compressed air: dry industrial air at 6 - 8 bar

Working temperature range: from +10°C to 35°C

COMPONENTS STORAGE AND TEMPERATURE CONDITIONING

N° 2 100 l capacity each vertical, jacketed cylindrical tanks PED certified, insulation to jacket, and complete with:

- @ flanged and removable lid;
- @ slow-speed agitator driven by a motor reducer;
- @ nylon visual level;
- @ tank pressurization system complete with pressure regulation valve and manometer;
- @ safety valve for maximum tank pressure;
- @ connection piping to the distribution pump.

The temperature control of each single component is executed directly inside the pertaining tank through a system including:

- @ electric resistances inside the jacket for heating;
- @ intercepting valve for cooling water control at the entry of the tank jacket;
- @ component temperatures monitored by a PT 100 probe and controlled by the PLC.

MIXING HEAD

The ECOMIX Y2K series of impingement type, self-cleaning high pressure mixing head is provided with flexible support hoist rod to support it and complete with flexible pipe 5m long.

The ECOMIX Y2K series of mixing head is equipped with a separation system on all the surfaces in contact between oildynamic circuit and PU (in order to avoid any contamination). In case of mains power failure the oildynamic system will only shut the mixing piston in order both to avoid erroneous working sequences and damages to the components lines.

The head is supplied with:

- @ proximity (one for each plunger);
- @ nozzles at variable pressure;
- @ oil electric distributor;
- @ n° 1 standard boom of about 1.9m length to support the mixing head thus allowing a 120° working radius and a 500mm vertical movement;
- @ hydraulic unit for mixing-head control.

ALARMS AND MAINTENANCE OPERATION MESSAGE

Full control and operation of all machine functions is by a PLC which, in case of anomalies, gives an acoustic warning with a clear text message display identifying the related problem and possible solution.

This system controls automatically the status of the machine by signalling appropriate maintenance operations. Each main element composing the machine is identified by a colour code depending on the number of either working hours or working cycles the machine has completed.

ELECTRIC CONTROL PANEL

The OMS design concept for the control system adopted for this brand new **ECOplus** series of high pressure machine is innovative and is based on Siemens S7 300 series PLC for reliability and world wide service and parts availability.

All machine variables and working parameters are set through an operator panel functioning as an interface between the PLC and the operator.

The main difference relates to the control system; in fact, the machine is self-diagnostic and checks that all variables are within their pre-set working range.

Indeed, should a variable exceed such pre-set limits, the machine itself will signal an alarm status by triggering a clear text message and, at the same time, all the necessary interventions (depending on the type of alarm) to ensure safe working conditions.

All data will be displayed and a given working page can be retained during the working process should the operator decide so.

ACCESSORIES

- @ Chiller unit for cold water circulation at closed loop;
- @ High pressure colour dosing unit;
- @ Refilling pumps from drums;
- @ Emulsification unit;
- @ Jib type boom.
- @ Magnetic coupling between electric motor and high pressure metering pump;
- @ Additional programmable pouring module - 99 programs - besides those 19 as standard.
- @ Capacitive loading levels with control of: minimum, start loading and maximum level.
- @ Electro-pneumatic loading valves actuated by the automatic levels.
- @ flow-valves for high and low pressure recycle sequences;

OPTIONAL

Manually operated self-cleaning filters (through a hand-wheel);

Additional heat exchanger on the components recycle line;

Programmable temperature control and recycle during week-end;

Power variation;

Jollymatic;

Magnetic joints;

Output readout by means of volumetric meter through relative display (for each line);

Output and ratios readout by means of volumetric meters through relative display (for both lines);

250 litres tanks.

Pneumatic injectors for pressure self-adjustment;

250 l. or 500 l. machine tanks

Second mixing head.

SERIES	OUTPUTS				Tank Capacity litres	Power Consumption kw	Weight Kg
	RATIO 1:1		RATIO 2:1				
	MIN. l/min	MAX. l/min	MIN. l/min	MAX. l/min			
ECOplus 15	6	17	9	13	100	23	900 - 1100
ECOplus 35	11.5	33	17	25	100	30	900 - 1100
ECOplus 100	33	85	49	64	100	45	900 - 1100
ECOplus 200	62	160	93	120	250	60	1100 - 1300
ECOplus 10F	/	6,8	4,5	10,2	100	21	900 - 1100
ECOplus 25F	12	17	9	25	100	27	900 - 1100
ECOplus 50F	/	33	17	50	100	38	900 - 1100
ECOplus 100F	62	85	50	122	250	53	1100 - 1300

Theoretical data calculated by considering a viscosity from 200 to 2000 cps and a specific weight of about 1,05

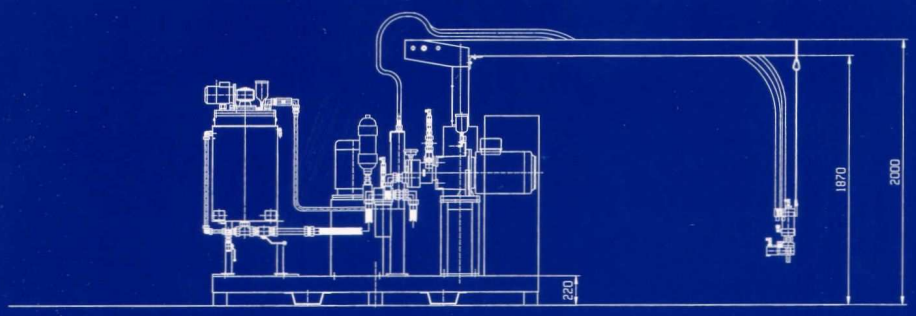

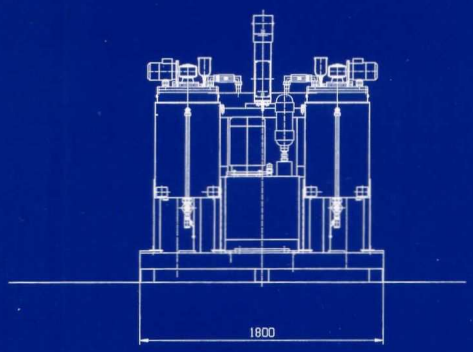

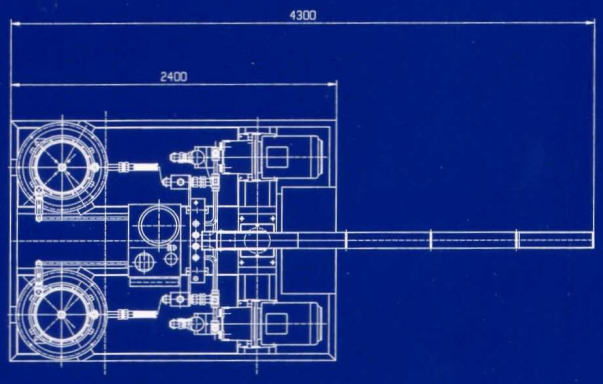

The above data is issued for guidance only. The detailed specification of any machine is subject to confirmation.
We reserve the right to improve the features of our equipment at any time without prior notice.

OMS Group
Polyurethane Evolution

Impianti OMS Spa
Via Sabbionetta,4
20050 Verano Brianza (Mi), Italy
Tel. +39-0362-9831 Fax +39-0362-983217
e-mail: impianti.oms@omsgroup.it
Internet: www.omsgroup.it

ICIM
ISO 9001 : 2000
Cert. n° 0577

March 2009, Issued